HAMPTON ROADS
PLANNING DISTRICT COMMISSION

REGIONAL
CONSTRUCTION STANDARDS

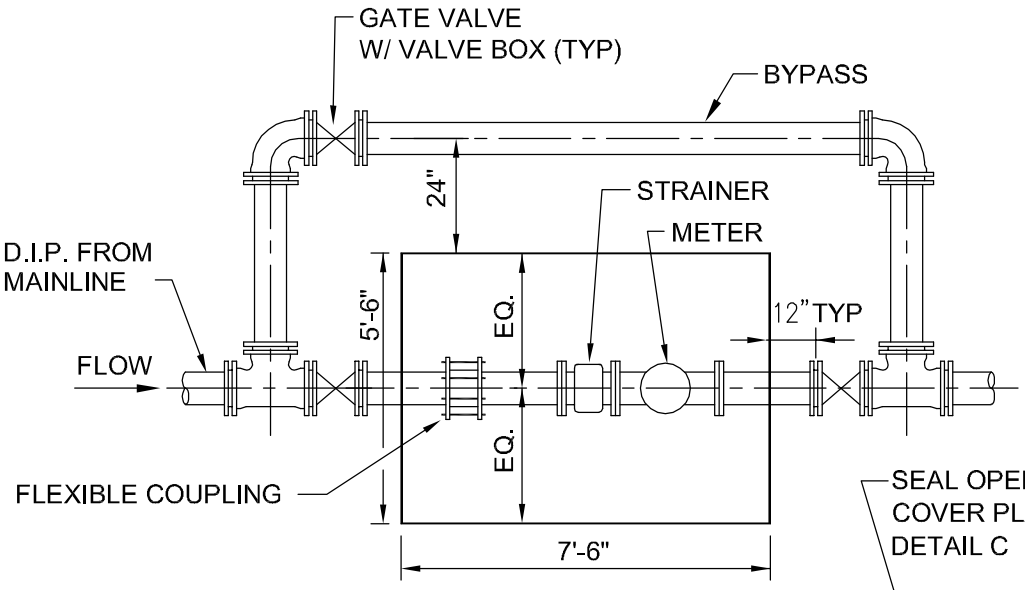

VAULT PLAN

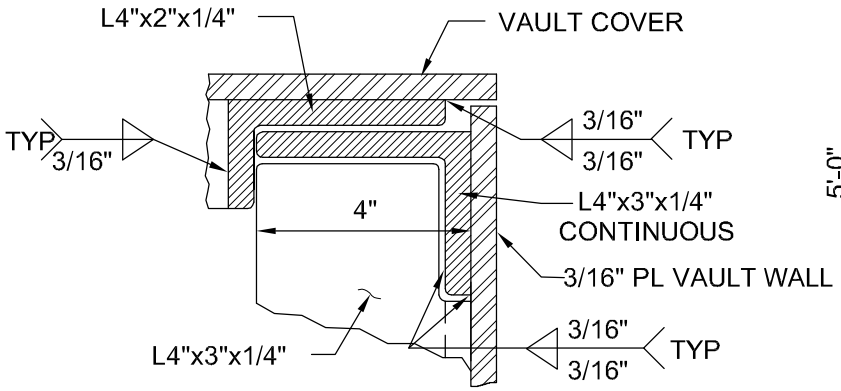

DETAIL "A"

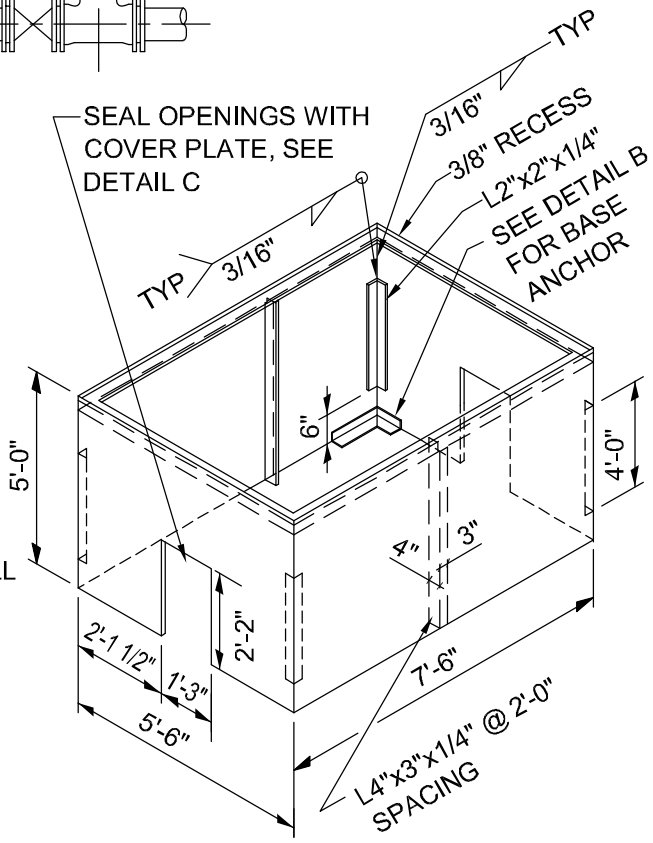

NOTE: ALL SIDE SUPPORT & BOTTOM ANGLES NOT SHOWN FOR CLARITY

VAULT (ISOMETRIC VIEW)

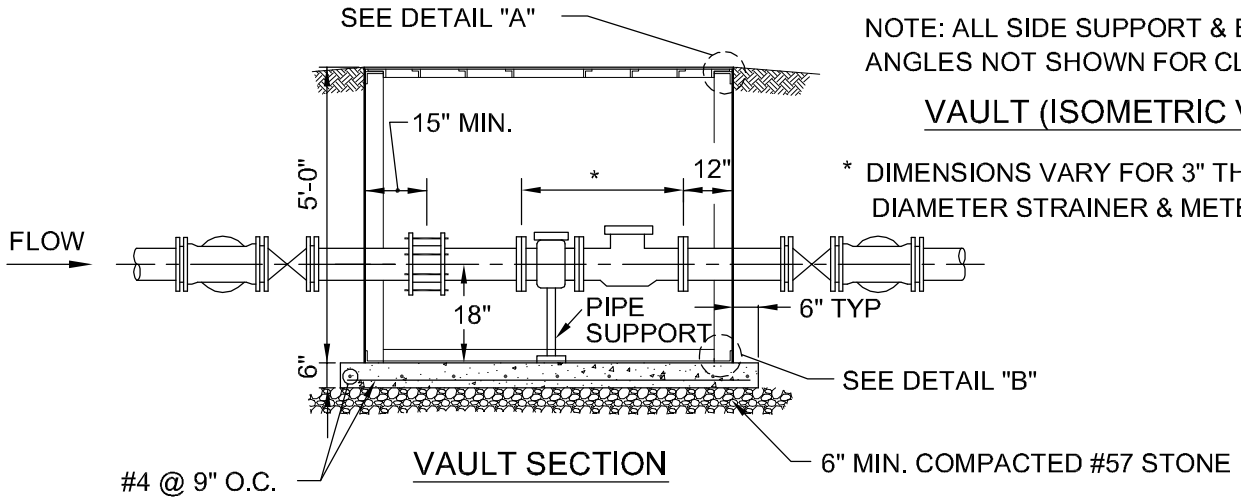

* DIMENSIONS VARY FOR 3" THRU 8" DIAMETER STRAINER & METER

VAULT SECTION

METAL METER VAULT
(3" THRU 8" WATER METER ASSEMBLIES)

NOT TO SCALE

REFERENCE	CATEGORY	DATE	SHEET No.	DETAIL No.
200,801	WATER DISTRIBUTION	12/10	1 0F 2	WD_12